The Nucleus

Word	Definition
Artificial transmutation	Changing one element into another by bombarding it with particle bullets in a particle accelerator.
Atomic Mass Unit (amu)	1/12 the mass of a C-12 atom, the approximate mass of protons and neutrons.
Atomic number	The number that identifies an element, equal to an atom's number of protons.
Deflect	Change in direction due to an outside force.
Emit	To give off something.
Half-life	The time it takes for half the mass of a sample of radioactive isotope to undergo decay. The period of time in which any given nucleus has a 50% chance of undergoing radioactive decay.
Isotope	Atoms of the same element that contain different numbers of neutrons and therefore differ in atomic mass as well.
Mass defect	The mass that was lost during a nuclear change that was converted into energy via $E=mc^2$.
Mass number	The sum total of the protons and neutrons in an atom.
Natural radioactivity (Radioactive Decay)	The spontaneous breakdown of an unstable nucleus into a more stable nucleus and a decay particle (alpha, beta-negative, beta-positive or gamma).
Neutron	The particle that has no charge and has a mass of 1 a.m.u.
Nuclear charge	The net positive charge of the nucleus, equal to the number of protons in the nucleus.
Nuclear fission	The process whereby a large nucleus is split by artificial transmutation into smaller nuclei with the release of a large amount of energy derived from the conversion of a tiny bit of mass into energy.
Nuclear fusion	The process whereby two small nuclei are combined to form one larger nucleus with release of a huge amount of energy derived from the conversion of a tiny bit of mass into energy.
Nucleon	A particle that exists in the nucleus (protons and neutrons.)
Nucleus	The central core of the atom, consists of protons and neutrons and has a net positive charge.
Particle accelerator	A device that uses electromagnetic fields to accelerate charged particles.
Proton	A particle that represents a unit charge of +1 and a mass of 1 a.m.u.
Weight-Average Mass	The average mass of a sample of element that is determined by the mass and abundance of every isotope of that element.

1) Atomic Structure (The Nucleus) (HW: p. 19, 20)

Essential Question: What is everything made up of?

Atoms are the smallest pieces an element can be broken into and still retain the properties of that element. It comes from the Greek word atomos, meaning "indivisible" (unbreakable).

Atoms are so tiny that they can not be seen directly. They can be detected through X-ray crystallography or atomic force microscopes, but only indirectly.

It takes 602 000 000 000 000 000 000 000 atoms of hydrogen to weigh 1 gram (the mass of a small paper clip).

Atoms are made up of the following particles:

A) Nucleons (Particles in the Nucleus)

1) Protons: have a mass of 1 atomic mass unit (1.66×10^{-24} grams) and a charge of +1. They are found in the nucleus of the atom, and the number of protons in the atom is the atomic number, which identifies what element the atom is. Oxygen (O) has an atomic number of 8, which means there are 8 protons in the nucleus. Since protons are the only particle in the nucleus to have a charge, the charge of the nucleus is + (# of protons). Since oxygen has 8 protons in the nucleus, oxygen has a nuclear charge of +8. We will use nuclear charge down the road for the purposes of explaining why it is easier to do nuclear fusion with smaller nuclei and why atoms have the sizes they do.

2) Neutrons: have a mass of 1 atomic mass unit, and no charge. They are found in the nucleus of the atom, and the number of neutrons added to the number of protons gives you the mass number of the atom. The number of neutrons does not affect the identity of the element. Oxygen's most common form has a mass number of 16. Since there are 8 protons in the nucleus of oxygen, this means there must also be 8 neutrons to give a combined mass of 16. **The number of protons and neutrons does NOT have to be equal**. In addition, atoms of any given element can have differing numbers of neutrons. Atoms of the same element with different numbers of neutrons in their nuclei are called **ISOTOPES** of one another. The most common isotope is the one who's mass equals the average atomic mass given on the periodic table rounded to the nearest whole number. Since O has a given average mass of 15.9994, the most common isotope of O is O-16, or Oxygen with a mass number of 16. See the diagram below.

B) Particles Outside The Nucleus

3) Electrons: have a mass of 1/1836 amu (9.11×10^{-28} grams) and a charge of -1. They are found orbiting the nucleus in energy levels. Atoms gain, lose or share electrons when they form chemical bonds. If electrons are gained and lost, an ionic bond is formed. If electrons are shared, a covalent bond is formed. The number of electrons in the atom equals the number of protons. Atoms are neutrally charged, so the + charged protons and the – charged electrons must be equal in number to give a neutral charge. Oxygen has 8 protons in its nucleus, so there must be 8 electrons zipping around outside the nucleus in energy levels. In this unit, the only thing you need to worry about is how to find out how many electrons an atom has, and what the charge and mass of an electron are. Later in the course, you will see just how important electrons are to all of chemistry. They are the part of the atom responsible for all chemical bonding. If it weren't for electrons, there would be no compounds. H would not bond to O, and water would not exist!

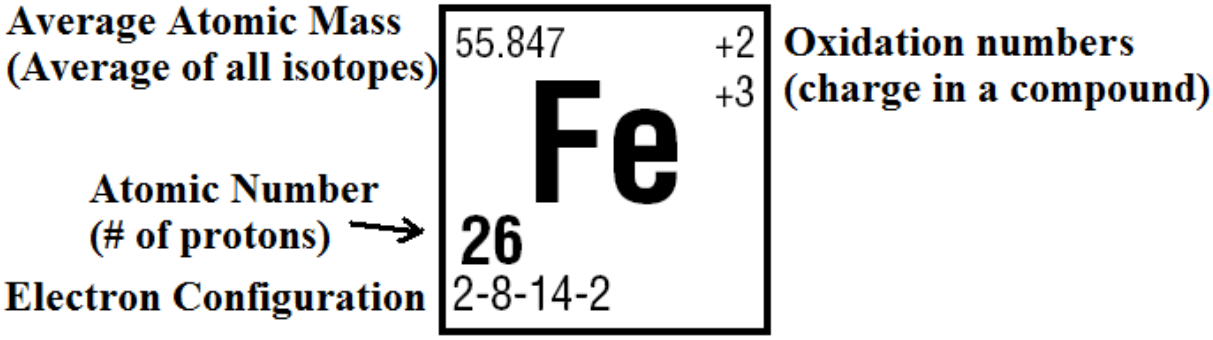

An atom of Helium (He: atomic number = 2, mass number = 4)

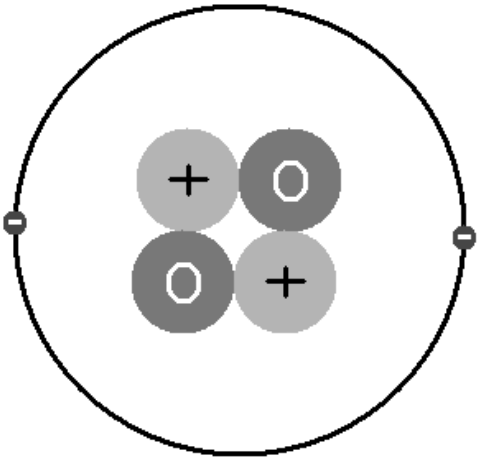

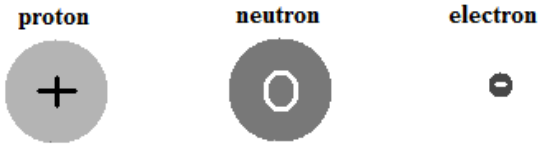

This is not to scale. The electron is 1/1836th the size of the proton, and the nucleus is so small that if the atom were the size of a baseball stadium, the nucleus would be the size of a baseball.

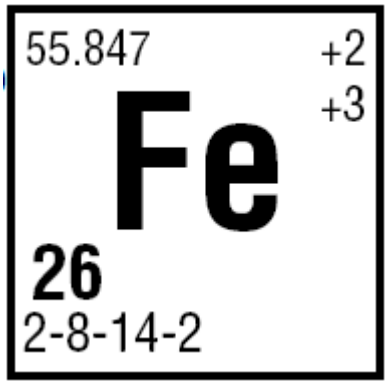

1) How many protons does an atom of iron (Fe) have? With an atomic number of 26, the atom has **26 protons**.

2) What is the nuclear charge of an atom of Fe? Since Fe has 26 protons, the nuclear charge is **+26**.

3) How many atomic mass units (amu) do the protons in an atom of Fe weigh? Since each proton has a mass of 1 amu, the mass of 26 protons is **26 amu.**

4) How many electrons does Fe have around its nucleus? The number of electrons in the atom must equal the number of protons. Since Fe contains 26 protons, it must also contain **26 electrons**. If you look at the electron configuration 2-8-14-2 and add up all of those electrons, you will see it adds up to **26 electrons.**

5) What is the most common isotope of Fe? Take the average atomic mass of all the isotopes of Fe (55.847) and round it to the nearest whole number (56). That is the mass number of the most common isotope of iron, **Fe-56**.

6) How many neutrons are in the nucleus of the most common isotope of Fe? To find the number of neutrons, take the mass number (which is the number of particles in the nucleus, protons and neutrons combined) and subtract out the atomic number (the number of protons). There are 56 particles in the nucleus of the most common isotope (Fe-56), of which 26 are protons (from the atomic number of 26). 56 – 26 = **30 neutrons** in the nucleus.

OK, what about these isotopes? Why does Fe have an AVERAGE atomic mass of 55.847? What are the other isotopes of iron?

There are four common naturally occurring isotopes of iron:

Mass of Isotope (amu)	Notation 1 Symbol – mass #	Notation 2 $^{\text{Mass \#}}$Symbol	# protons (atomic #)	# neutrons (mass # - atomic #)	# electrons (atomic #)	% Abundance in Nature
54	Fe-54	^{54}Fe	26	54-26 = **28**	26	5.845%
56	Fe-56	^{56}Fe	26	56-26 = **30**	26	91.754%
57	Fe-57	^{57}Fe	26	57-26 = **31**	26	2.119%
58	Fe-58	^{58}Fe	26	58-26 = **32**	26	0.282%

As you can see, the most common (abundant) isotope of iron really is Fe-56! It makes up more than 90% of all iron atoms.

But that average…looks kind of suspicious! If you average 54, 56, 57 and 58, you get 56.25, not 55.847. Apparently **the average mass is <u>not</u> a straight average,** the type you are used to calculating! See the next page for the sordid details!

Calculating Weight-Average Atomic Mass

The atomic masses given on the periodic table are **WEIGHT-AVERAGED** masses. This is calculated using both the **masses** of each isotope and their **percent abundances** in nature. **<u>For the purposes of simplicity, we will round weight-average mass to the THOUSANDTHS place.</u>**

To find the **w**eight-**a**verage **m**ass of an element given the mass of each isotope and each isotopes percent abundance:

$$\mathbf{WAM = (mass_{isotope\ 1}\ X\ {}^{\%}/_{100}) + (mass_{isotope\ 2}\ X\ {}^{\%}/_{100}) + (mass_{isotope\ 3}\ X\ {}^{\%}/_{100}) + \ldots}$$

So, for the four isotopes of iron:

Mass of Isotope (amu)	Notation 1 Symbol – mass #	% Abundance in Nature
54	Fe-54	5.845%
56	Fe-56	91.754%
57	Fe-57	2.119%
58	Fe-58	0.282%

Weight average mass of Fe is:

$$\mathbf{WAM = (54\ X\ {}^{5.845}/_{100}) + (56\ X\ {}^{91.754}/_{100}) + (57\ X\ {}^{2.119}/_{100}) + (58\ X\ {}^{0.282}/_{100})}$$

$$\mathbf{WAM = (3.156) + (51.382) + (1.208) + (0.164)}$$

<u>WAM = 55.910 amu</u>

Another way to look at this is as follows: take **5.845% of 54 (which is 3.156)**, then take **91.754% of 56 (which is 51.382)**, then take **2.119% of 57 (which is 1.208)** and then finally **0.282% of 58 (which is 0.164)**. Take the four numbers you get as a result and add them together, and you have the weight-average mass!

Note that this is still not exactly the same as the listed weight-average mass on the Periodic Table. The isotope information you used to solve this problem came from the National Nuclear Data Center at Brookhaven National Laboratory. The weight-average mass given on the Periodic Table may include the other isotopes of iron, which are all radioactive and make up a very tiny percentage of iron's mass. **The weight-average mass is based on the abundance of the naturally occurring isotopes of that element.**

Also, protons and neutrons do not weigh exactly 1 amu. Neutrons weigh a tiny fraction more than protons do. An atomic mass unit is actually an average mass, found by taking the mass of a C-12 nucleus and dividing it by 12.

Relative atomic masses are based on $^{12}C = 12.000$

Is how it is shown on the Periodic Table's key.

Here's another example problem:

Boron (B) has two naturally-occurring isotopes. B-10 has a mass of 10.0 amu and makes up 19.80% of all B atoms. B-11 has a mass of 11.0 amu and makes up 80.20% of all B atoms. What is the weight-average mass of boron?

$$\text{WAM} = (10.0\ X\ {}^{19.80}/_{100}) + (11.0\ X\ {}^{80.20}/_{100}) = \underline{\mathbf{10.802\ amu}}$$

Basically, you are taking 19.80% of 10.0, then taking 80.20% of 11.0 and adding the two numbers together.

2) Natural Radioactivity (HW: p. 21-23) Unit 4.2 Date_____

Essential Question: How do nuclear reactions get away with breaking the law?

Nuclear Stability: the larger (more massive) a nucleus is, the harder it is for it to stay together.

When a nucleus is **RADIOACTIVE**, it gives off decay particles and changes from one element to another. This is also known as NATURAL DECAY or NATURAL TRANSMUTATION.

Atoms with an atomic number of 1 through 83 have at least one stable (nonradioactive) isotope, but **all** isotopes of elements with an atomic number of **84 or more** are radioactive.

The Three Types Of Natural Decay (that lead to atoms of one element becoming atoms of another element):

Decay Type (symbol)	Notation	Mass	Charge	What happens to the atom when it undergoes this type of decay
Alpha (α)	$^{4}_{2}He$	4 (made of 2 protons and 2 neutrons	+2 (from the 2 protons)	The nucleus loses 2 protons (atomic mass decreases by 2) and 4 total particles (mass decreases by 4). It turns into a different element. $^{238}_{92}U \rightarrow {}^{4}_{2}He + {}^{234}_{90}Th$ radioactive nucleus / alpha particle / new nucleus The alpha particles released by uranium in the Earth's crust build up underground in porous rock, where they gain electrons and turn into actual atoms of pure helium. This is where we get the helium that is in balloons!
Beta ($\beta-$)	$^{0}_{-1}e$	0 (made of an electron)	-1	A neutron in the nucleus decays to form a proton (atomic number increases by 1, but mass stays the same) and an electron (the beta particle) which leaves the nucleus at high speeds. $^{42}_{19}K \rightarrow {}^{0}_{-1}e + {}^{42}_{20}Ca$ radioactive nucleus / beta particle / new nucleus
Positron ($\beta+$)	$^{0}_{+1}e$	0 (made of an anti-electron (positron)	+1	A proton in the nucleus decays to form a neutron (atomic number decreases by 1, but mass stays the same) and a positron (the antimatter form of an electron) which leaves the nucleus at high speeds. $^{53}_{26}Fe \rightarrow {}^{0}_{+1}e + {}^{53}_{25}Mn$ radioactive nucleus / positron particle / new nucleus

You can find out what kind of decay selected radioactive isotopes will undergo by looking on Reference Table N.

Then, there is one more type of decay, called gamma decay (γ). This takes the form of a high-energy particle of light that is given off as the nucleus becomes more stable. It does not change the identity of the element. It has no mass or charge, and is so energetic that it can only be stopped by a 30-cm thick layer of concrete or a 1-foot thickness of solid lead. In contrast, alpha particles can be stopped by a couple of feet of AIR, and beta and positron particles can be stopped by a thin sheet of aluminum foil. Gamma can be given off by itself, or it can be given off with any of the other types of decay.

This diagram shows the path taken by radioactive particles as they pass through an electric field. On the left is a shielded container that holds a sample of radioactive substance, with a small hole at the end to allow decay particles to stream out in a straight line. Above and below the stream are electrically charged plates, which deflect (change the path of) the beams as they come out. Positive-charged particles (like alpha and positron) are attracted to the negatively charged plate. Negative-charged particles (like beta) are attracted to the positively charged place. The gamma rays, having no charge, pass through undeflected. On the right side is a screen that has been coated with zinc sulfide (ZnS), which is a phosphor (material that glows when energized particles hit it). ZnS is used as a phosphor coating on television sets with picture tubes and CRT (cathode ray tube) computer monitors.

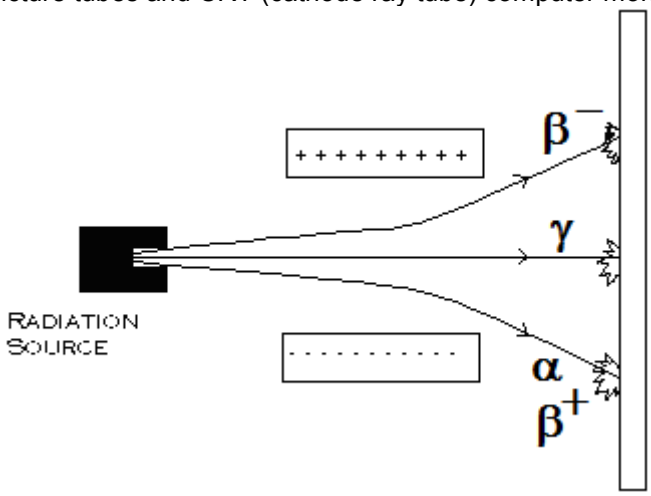

Proton/Neutron Ratio: The ratio of n:p in a stable atom varies with size. Small atoms are stable at a 1:1 ratio. As the atom becomes larger, more neutrons are needed for stability, driving the stable n:p ratio as high as 1.5:1. This creates a zone of stability, inside of which the isotopes are stable. Outside the zone, nuclei either have too many or too few neutrons to be stable, and therefore decay by emitting α, β^- or γ particles to bring the ratio back to the zone of stability. ALL ISOTOPES OF ALL ELEMENTS ABOVE **Bi** ARE UNSTABLE AND UNDERGO RADIOACTIVE DECAY.

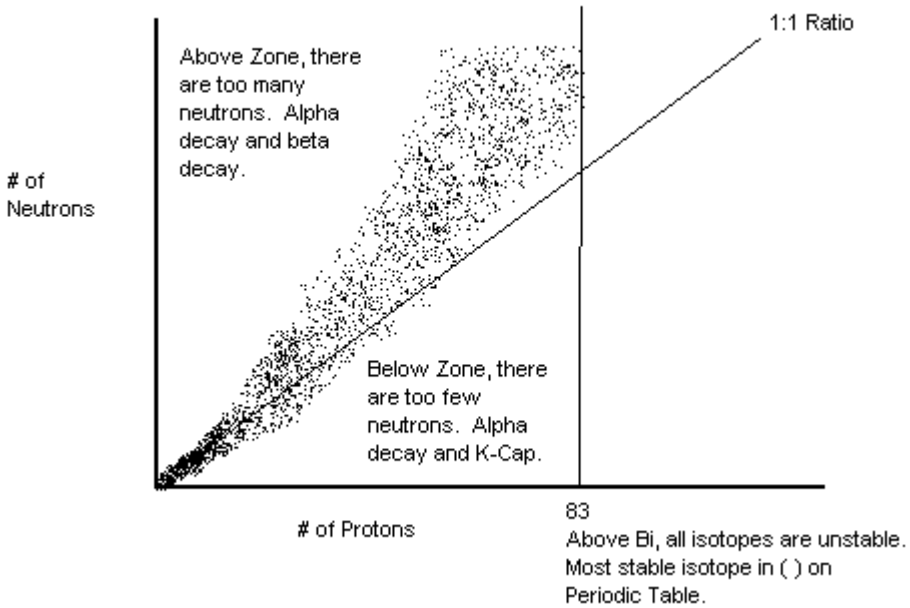

video: https://www.youtube.com/watch?v=KWAsz59F8gA

Nuclear Energy

Radioactive decay gives off energy. In fact, the energy given off by the radioactive isotopes in the Earth's core has kept the core molten for the last 4.5 billion years. The molten core gives us our planet's magnetic field, which shields us from high-energy particles given off by the sun (such as high-energy protons given off during solar flares).

The energy that is given off during a nuclear change comes from the **MASS DEFECT**...a little bit of **mass that is destroyed** (so little that you would hardly even miss it) and converted into huge amounts of energy. This would appear to be in direct violation of the Law of Conservation of Energy, but that only covers physical and chemical changes, not nuclear changes. The equation that is used to calculate the energy given off during a nuclear change is $\mathbf{E=mc^2}$, discovered by **Albert Einstein**, but used by **Lise Meitner** to make nuclear power possible. **E** is energy, in joules. **m** is the mass that was destroyed by the nuclear change, in kg. $\mathbf{c^2}$ is the speed of light squared, a huge number (9.00×10^{16} m^2/sec^2). You are not responsible for doing any calculations involving energy formed from the destruction of mass, what you need to really focus on is this fact:

A HUGE amount of energy can be created by destroying a TINY amount of mass.

Later, you'll see how you can use this fact to make nuclear power plants to generate electricity!

How Can Radioactivity Be Detected?

It is important to be able to detect radioactivity. How else can we be sure that we are not exposing ourselves to harmful levels of radiation? Radioactivity, above certain doses (measured in REMS), is harmful to living beings.

1) Radioactivity can expose protected photographic film. This was discovered February 26th, 1896 by **Antoine Henri Becquerel**, and was the first evidence ever discovered of the property of radioactivity. He found that a chunk of uranium rock, placed on top of protected photographic film, causes it to be exposed. He reasoned that there must be some high-energy particles escaping the rock that penetrated the protective wrapper of the sheet of film and activated the film pigments themselves. If you are in a photography class, I welcome you to try this experiment for yourself! Just take a sheet of film, seal it up in a light-proof wrapper (leave it in the darkroom if you want to) and place a chunk of uranium rock (which I have) on top of it. Let it sit for about a week and then develop the film! You can also try this trick with Polaroid film, but it is becoming hard to find since Polaroid discontinued their instant film cameras.
2) Radioactive isotopes cause phosphorescent (glow-in-the-dark) materials to glow. This fact was discovered by **Marie and Pierre Curie**, who discovered the elements radium and polonium, which both give off significantly more radiation per gram than uranium does. Radium causes glow-in-the-dark materials to glow continuously. Usually, you expose them to light, and then they glow. The glow fades as the night goes on. When mixed with radium, though, the radioactivity pumps out constant energy that causes the materials to glow brightly, even when left for years in a dark room! This property of radium was used to make glow-in-the-dark hands and markings for alarm clocks. The people who hand-painted the radium paint on to the clocks suffered from cancer and Marie Curie herself died of leukemia as a result of radium exposure. Since then, electric backlighting has replaced radium as a way of telling time in the dark.

3) Radioactive decay particles are charged, and they ionize (give a charge to) matter that they pass through. Hans Geiger invented the **Geiger Counter**, which detects alpha decay by detecting the ionization of argon gas inside a sealed tube. **Walther Müeller** improved this device so that it can detect any kind of ionizing radiation. This device is now called a **Geiger- Müeller counter**, and is still used today when radioactivity needs to be detected. This is the single best method of detecting radioactive decay. It displays the radioactivity in terms of **counts per time period (counts per second, counts per minute)**, which can be used to determine the half-life of a radioactive isotope. More on half-life in the next topic!

Uranium Decay: U-238 is unstable and decays into more stable nucei. It takes 14 decay steps until a stable, non-radioactive nucleus is finally reached. The daughter nuclide of one step becomes the parent nuclide of the next:

PARENT NUCLIDE	DAUGHTER NUCLIDE
1) $\alpha)$ $^{238}_{92}U$	$\rightarrow$ $^{4}_{2}He$ + $^{234}_{90}Th$
2) $\beta^{-})$ $^{234}_{90}Th$	$\rightarrow$ $^{0}_{-1}e$ + $^{234}_{91}Pa$
3) $\beta^{-})$ $^{234}_{91}Pa$	$\rightarrow$ $^{0}_{-1}e$ + $^{234}_{92}U$
4) $\alpha)$ $^{234}_{92}U$	$\rightarrow$ $^{4}_{2}He$ + $^{230}_{90}Th$
5) $\alpha)$ $^{230}_{90}Th$	$\rightarrow$ _____ + _____ **OK, now YOU finish them off!**
6) $\alpha)$	
7) $\alpha)$	
8) $\alpha)$	
9) $\beta^{-})$	
10) $\beta^{-})$	
11) $\alpha)$	
12) $\beta^{-})$	
13) $\beta^{-})$	
14) $\alpha)$	

The half-life of U-238, according to Reference Table N, is 4.51 X 10^9 years (4.51 billion years). The oldest rocks on Earth consist of a 1:1 ratio of U-238 to Pb-206. This means that the Earth's oldest rocks are 1 half-life of uranium old. How old is the Earth? 4.51 billion years old! Looks pretty good for its age, doesn't it?

The mode of decay can be found on Reference Table N.

video: https://www.youtube.com/watch?v=E2-ZGjGZvOo&t=5s

HISTORY OF THE DISCOVERY OF RADIOACTIVITY

Henri Becquerel was born into a family of scientists. His grandfather had made important contributions in the field of electrochemistry while his father had investigated the phenomena of fluorescence and phosphorescence. Becquerel not only inherited their interest in science, he also inherited the minerals and compounds studied by his father. And so, upon learning how Wilhelm Röntgen discovered X rays by observing the fluorescence they produced, Becquerel had a ready source of fluorescent materials with which to pursue his own investigations of these mysterious rays. The material Becquerel chose to work with was a double sulfate of uranium and potassium which he exposed to sunlight and placed on photographic plates wrapped in black paper. When developed, the plates revealed an image of the uranium crystals. Becquerel concluded "that the phosphorescent substance in question emits radiation which penetrates paper opaque to light." Initially he believed that the sun's energy was being absorbed by the uranium which then emitted X rays. Further investigation, on the 26th and 27 of February, 1896, was delayed because the skies over Paris were overcast and the uranium-covered plates Becquerel intended to expose to the sun were returned to a drawer. On the first of March, he developed the photographic plates expecting only faint images to appear. To his surprise, the images were clear and strong. This meant that the uranium emitted radiation without an external source of energy such as the sun. Becquerel had discovered radioactivity, the spontaneous emission of radiation by a material. Later, Becquerel demonstrated that the radiation emitted by uranium shared certain characteristics with X rays but, unlike X rays, could be deflected by a magnetic field and therefore must consist of charged particles. For his discovery of radioactivity, Becquerel was awarded the1903 Nobel Prize for physics.

Marie Curie, intrigued by what Becquerel had discovered, examined the mineral pitchblende (uranium oxide) and found it to be more radioactive than could be accounted for by just uranium. She chemically separated the mineral into its component elements (of which there are about 30) and found that two separated samples were much more radioactive than uranium. A sample of barium contained a new element that was about a million times more radioactive than uranium. It came through with barium because both have similar chemical properties. She named this element radium, and its existence was confirmed through spectrographic analysis. A sample of bismuth contained a second element that was also highly radioactive, this she called Polonium, named after Poland, where she was born. She was never successful at separating polonium from bismuth, but she did separate the radium from the barium. She discovered that it had some interesting properties:

1) Radium emits particles, some of which are affected by a magnetic field. These must be charged particles. One traveled very fast and was of negative charge, this was an electron (beta particle). Another was larger and positive, a helium nucleus (alpha particle). Another was not affected by the field, and penetrated through lead. This was the gamma ray.

2) Radium emits a radioactive gas when it decays. This is now known as radon, which gained notoriety in the last couple of decades as a source of potential lung cancer. It may collect in basements of houses built in areas of high pitchblende concentration.

3) Radium causes glow-in-the-dark (phosphorescent and fluorescent) materials to glow.

a) Fluorescent: glows only as long as a source of radiation is present…like stuff that glows when a black-light hits it. Take away the black-light and the glow disappears.

b) Phosphorescent: Glows after source of radiation is taken away…like paste-on stars that you might put on the ceiling. Light energizes the material, and after the light is taken away the material continues to glow, the glow slowly disappearing as the night goes on.

Radium gives these materials a constant source of energy through radiation, so the glow is continuous. This property was used to make glow-in-the-dark clock dials so you could see what time it is at night. The dials were hand-painted, and the painters kept their brushes sharp by licking the tips. Over time, they began to grow tumors on their tongues, an indication of the health effects of radiation. Marie Curie herself died of leukemia, possibly caused by the work she was doing with radiation.

4) Radium gives off enough heat to melt its weight in ice in an hour.

5) Radium causes electroscopes to become charged. She reasoned that this is because of the charged particles that it gives off. This is called “ionizing” the air. Ionized air conducts electricity. This property is useful in detecting radiation with a device called a “Geiger-Mueller Tube”, sometimes called a Geiger Counter.

Show video from link above

3) Half-Life (HW: p. 24, 25)

Essential Question: How exactly do we know how old archeological remains are? How can radioactivity save your life?

Radioactive Decay is a **RANDOM** process. It is not possible to predict **when** a particular nucleus will decay, but we can make fairly accurate predictions regarding **how many** nuclei in a large sample will decay in a given period of time.

Definition of Half-Life:

The half-life of a radioactive isotope is defined as the period of time that must go by for half of the nuclei in the sample to undergo decay. During one half-life period:

- **Half of the radioactive nuclei in the sample decay into new, more stable nuclei**

If a sample contains 1000 nuclei of a radioactive isotope now, 500 will undergo decay over the course of one half-life.

- Half the mass of the radioactive isotope is converted into a new, more stable isotope

If a sample contains 4.0 grams of a radioactive isotope now, after one half-life, 2.0 grams will remain undecayed, the other 2.0 grams will be made up of a new, more stable isotope.

- A Geiger-Müeller counter's count-per-time period will be half of what it started at

If a Geiger-Müeller counter is showing 400 counts per minute now, after one half-life, the counter will show 200 counts per minute.

After **one** half-life, **half (50%)** of the original amount of the sample will have undergone radioactive decay.

After a **second** half-life, **one quarter (25%)** of the original sample will remain undecayed.

After a **third** half-life, **one eighth (12.5%)** of the original sample will remain undecayed.

NOTE: The actual half-life time is constant. If the half-life is 10 days, then 2 half-lives would take 20 days, 3 half-lives take 30 days, 4 half-lives take 40 days and so on.

The half-life of many radioactive isotopes can be found on Reference Table N.

SOLVING HALF – LIFE PROBLEMS

1) You know how much of the isotope you have now, you want to find out how much will be left after a certain amount of time (going into the future).

Step 1: Determine how many half-lives have gone by. Take how much time has gone by and divide it by the duration of the half-life.

Step 2: Cut the amount (mass, percent, fraction, number of nuclei) in half as many times as there are half-lives.

EXAMPLES:

The half-life of Rn-222 (a carcinogenic house pollutant) is 3.8 days. If today your basement contains 20.0 grams of Rn-222, how much will remain after 19 days assuming no more leaks in?

half-lives = time elapsed/half-life time = 19 days/3.8 days = 5 half-lives have gone by.

So, cut the starting amount (20.0 grams) in half 5 times!

20.0 → 10.0 → 5.0 → 2.5 → 1.25 → **0.625 grams is the final amount left!**

A laboratory sample of ^{32}P triggers 400 clicks per minute in a Geiger-Mueller counter. How many days will it take for the ^{32}P to decay enough so that there are only 50 clicks per minute?

For this one, you need to find out how many half-lives it takes for the counter to go from 400 to 50 clicks per minute. Cut 400 in half until you get to 50:

400 → 200 → 100 → 50

So, you needed to cut 400 in half THREE times to get to 50, so 3 half-lives have gone by.

Now, look up the half-life of ^{32}P on Reference Table N. It's 14.3 days. That's how long each half-life is. If three of these half-lives have gone by:

14.3 days/half-life X 3 half-lives = **<u>42.9 days</u> to cut 400 counts per minute down to 50 counts per minute.**

A cylinder contains 5.0 L of pure radioactive ^{19}Ne. If the cylinder is left to sit for 103.2 seconds, what percent of our original sample of ^{19}Ne will remain?

Look up the half-life of ^{19}Ne on Reference Table N: 17.2 seconds.

half-lives = time elapsed/half-life time = 103.2 days/17.2 seconds = 6 half-lives have gone by.

When we started, 100% of the sample was pure ^{19}Ne. So, cut 100 in half 6 times to find the percent remaining:

100 → 50 → 25 → 12.5 → 6.25 → 3.125 → **<u>1.5625%</u> of the original sample is still pure, undecayed ^{19}Ne.**

2) You know how much of the isotope you have now, you want to find out how there was a certain amount of time ago (going into the past).

Step 1: Determine how many half-lives have gone by. Take how much time has gone and divide it by the duration of the half-life.

Step 2: Double the amount (mass, percent, fraction, number of nuclei) as many times as there are half-lives.

The half-life of Tc-99m* (used to locate brain tumors) is 6.0 hours. If 10. micrograms are left after 24 hours, how much Tc-99m was administered originally?

half-lives = time elapsed/half-life time = 24 hours/6.0 hours = 4 half-lives have gone by.

So, double the starting amount (10. micrograms) 4 times!

10. → 20. → 40. → 80. → **<u>160. micrograms</u> was the original amount administered!**

If a patient suffered complications due to overdose, and it is found that the doctor gave more Tc-99m than was necessary, the doctor will be in for a bit of trouble.

** the "m" indicates "metastable", which means it only gives off gamma rays, not alpha, beta or positron particles.*

A laboratory sample of ^{32}P triggers 100. clicks per minute in a Geiger-Mueller counter. How many days ago did the ^{32}P to decay enough to produce 1600. clicks per minute?

Find out how many half-lives it takes for the counter to go from 400 to 50 clicks per minute. Cut 1600 in half until you get to 100:

1600 → 800 → 400 → 200 → 100

So, you needed to cut 1600 in half FOUR times to get to 100, so 4 half-lives have gone by.

Now, look up the half-life of ^{32}P on Reference Table N. It's 14.3 days. That's how long each half-life is. If four of these half-lives have gone by:

14.3 days/half-life X 4 half-lives = **57.2 days ago, the counter would have read 1600 clicks per minute.**

3) You want to find out how long the half-life is, knowing how much a sample has decayed over a given amount of time.

Step 1: Determine how many times you can cut your original amount in half in order to get to your final amount. This is the number of half-lives that have gone by.

Step 2: Divide the time that has elapsed by the number of half-lives that have passed.

A radioactive sample is placed next to a Geiger counter and monitored. In 20.0 hours, the counter's reading goes from 500 counts per minute to 125 counts per minute. How long is the half-life?

First, find out how many half-lives it will take for the counter to go from 500 to 125 counts per minute:

500 → 250 → 125 **You needed to cut 500 in half TWO times to get to 125, so 2 half-lives have gone by.**

Half-life = time elapsed / # of half-lives = 20.0 hours / 2 half-lives = **10.0 hours per half-life!**

A sample of pure radioactive isotope is left to decay. After 40.0 days, the sample is placed in a mass spectrometer, and it is determined that the sample only 25% of the original isotope remains. How long is the half-life?

First, find out how many half-lives it will take for 100% of a sample to decay to 25%:

100 → 50 → 25 **It takes TWO half-lives for the sample to decay from 100% to 25%.**

Half-life = time elapsed / # of half-lives = 40.0 days / 2 half-lives = **20.0 days per half-life!**

4) RADIOACTIVE DATING: used to determine the age of a substance that contains a radioactive isotope of known half-life.

Step 1: Determine how many times you can cut your original amount in half in order to get to your final amount. This is the number of half-lives that have gone by.

Step 2: Multiply the number of half-lives by the duration of a half-life (found on Reference Table N).

The oldest rocks on Earth have been found to contain 50% U-238 and 50%Pb-206 (what U-238 ultimate decays into). What is the age of these rocks?

First, find out how many half-lives have had to go by so that you have gone from 100% U-238 to 50% U-238:

100 → 50 **ONE half-life has gone by!**

Age of Sample = # Half-Lives X Half-Life Duration (found on Reference Table N)

What is the half-life of U-238, according to Reference Table N? 4.51×10^9 years.

Age of Sample = # Half-Lives X Half-Life Duration = 1 half-life X (4.51×10^9 years) = **<u>4.51×10^9 years</u> old!**

An ancient scroll is discovered, and it is found that only 25% percent of the original concentration of C-14 (a radioactive isotope found in equal concentration in all living beings) remains. How old is the scroll?

First, find out how many half-lives have had to go by so that you have gone from 100% C-14 to 25% C-14:

100 → 50 → 25 **TWO half-lives have gone by!**

What is the half-life of C-14, according to Reference Table N? 5730 years.

Age of Sample = # Half-Lives X Half-Life Duration = 2 half-lives X 5730 years = **<u>11 460 years</u> old!**

<u>USES OF RADIOACTIVE ISOTOPES</u>

Many radioactive isotopes are very useful to us! Here is a sampling of isotopes that we have put to good use:

Radioactive Isotope	Use
C-14	Used to determine the age of biological remains (archaeology)
I-131	Used to detect and cure hyperthyroidism (overactive thyroid)
Co-60	Used as a source of radiation for radiotherapy of cancer
Tc-99m	Used to image blood vessels, especially in the brain, to detect tumors
Pu-239	Used as a highly fissionable fuel source for nuclear power or nuclear weapons
Am-241	Used in tiny amounts in smoke detectors as a source of ions to make a current
U-235	Used as fissionable fuel source for nuclear power or nuclear weapons
U-238	Used to determine the age of uranium-containing rock formations (geology)

Irradiation of food: kills bacteria, allowing it to be stored for a longer time without having to pasteurize. Pasteurizing involves heating the food to kill bacteria, which can change the flavor of the food. Irradiation does not change the flavor.

Radioactive isotopes are often used medically in the body to either treat cancer or to detect potential problems. Since radioactivity itself can cause cancer with exposure, any isotopes administered to a person should have a **short half- life** and be quickly eliminated from the body (usually via urination).

4) Nuclear Power (HW: p. 26, 27)

Essential Question: How can we turn one element into another and get a lot of useful energy in the process?

1) Artificial Transmutation: Changing one element into another one

The Sun contains 92 naturally occurring elements, from hydrogen to uranium. All of the elements more massive than uranium were produced using artificial transmutation. From Neptunium (93) to Ununoctium (118), these "transuranium" elements were made by people!

So, how can you make an element? You need three ingredients:

1) A sample of **target nuclei**, usually very heavy ones.

2) A **particle "bullet"** that has a charge (almost always a positive charge, like an alpha particle or another nucleus, but electrons can be accelerated, too)

3) A **particle accelerator** to make the bullet move fast enough (close to the speed of light) to collide with the nuclei and change them into different elements.

The particle accelerator uses electromagnetic fields to accelerate charged particles**. Neutral particles, such as neutrons or gamma rays, cannot be accelerated in a particle accelerator.**

Particle accelerators need to be HUGE in order to get the bullet particles up to speed. Here is a list of a few currently operating particle accelerators and their sizes:

1) U.C. Berkeley Cyclotron: round, 60 inches in diameter. Element 97, Berkelium (Bk) is named in honor of this place where so many new isotopes were made.

2) LEP at CERN, ring-shaped, 27 kilometers (17 miles) in diameter. CERN is located northwest of Geneva, Switzerland, on the French/ Swiss border.

3) Large Hadron Collider at CERN, multiple-rings, 27 kilometers (17 miles) in diameter.

Generally, the larger the collider, the faster the particle bullets can travel, so heavier and heavier elements can be made.

To determine the products of artificial transmutation:

Step 1: One of the products will be unknown. Add up the mass numbers on the side that all particles are known. The mass numbers of the other side should add up to the same thing.

Step 2: Add up the atomic numbers (charges) on the side where all particles are known, The charges of the other side should add up to the same thing.

Step 3: Look up the atomic number (if 3 or more) on the Periodic Table and identify what element you have. If the atomic number is 2 or less (including -1), then look up the identity of the particle on Reference Table O.

$^{14}_{7}N + ^{4}_{2}He \rightarrow ^{17}_{8}O + X$ On the top: 14 + 4 = 17 + x, so the mass is 1. X is $\underline{^{1}_{1}\mathbf{H}}$

On the bottom: 7 + 2 = 8 + x, so the charge is 1.
This is a PROTON, according to Reference Table O.

$^{27}_{13}Al + ^{4}_{2}He \text{ ---> } X + ^{1}_{0}n$ On the top: 27 + 4 = x + 1, so the mass is 30. X is $\underline{^{30}_{15}\mathbf{P}}$

On the bottom: 13 + 2 = x + 0, so the charge is 15.
Element 15 is PHOSPHOROUS (P).

These transmutations were first performed by **Ernest Rutherford**, the scientist who first identified alpha particles.

Transuranium Elements:

$^{239}_{94}Pu + ^{4}_{2}He \rightarrow ^{242}_{96}Cm + X$

On the top: 239 + 4 = 242 + x, so the mass is 1.
On the bottom: 94 + 2 = 96 + x, so the charge is 0.
This is a NEUTRON, according to Reference Table O.

X is $\underline{^{1}_{0}\mathbf{n}}$

$^{249}_{98}Cf + ^{12}_{6}C \rightarrow X + 4\ ^{1}_{0}n$

On the top: 249 + 12 = x + (4 X 1), so 261 = x + 4, the mass is 257.
On the bottom: 98 + 6 = x + (4 X 0), so 104 = x + 0, the charge is 104.
Element 104 is RUTHERFORDIUM (Rf).

X is $\underline{^{257}_{104}\mathbf{Rf}}$

So, what's the difference between NATURAL DECAY and ARTIFICIAL TRANSMUTAION?

Unique To Natural Decay $^{234}_{91}Pa \rightarrow ^{0}_{-1}e + ^{234}_{92}U$	**COMMON TO BOTH**	**Unique to Artificial Transmutation** $^{239}_{94}Pu + ^{4}_{2}He \rightarrow ^{242}_{96}Cm + X$
Unstable nucleus undergoes decay all by itself, turning into a new element.	Both form new elements from old ones.	Stable nucleus is forced to change into a less stable nucleus of a new element.
The left side of the equation has only the unstable nucleus, the right side has both the decay particle and the new, more stable nucleus.	In both, the masses on top of each side add up to the same, and the charges on the bottom of each side add up to the same.	The left side of the equation has the target nucleus and the particle bullet, the right side shows the results of that collision.
Produces energy through the destruction of mass.	Both follow Einstein's equation $E=mc^2$. A tiny bit of mass (mass defect) is destroyed and energy is created.	Produces energy through the destruction of mass, however much more energy has to go into the process than comes out of it.

2) Nuclear Power: using $E=mc^2$ to solve our energy problems by creating energy from the destruction of mass.

You may have noticed the price of gas going up at the pump? Crude oil prices have skyrocketed in the past few years. Why? Oil is a limited resource that is being used by more and more countries. For years, the United States was the only major consumer of fossil fuels. We use so much of them, we can't produce enough oil on our own to satisfy the growing demands of an energy-hungry culture. Oil has been traditionally a cheap source of energy, because fuels made from it (such as gasoline, kerosene, and fuel oil) burns readily and releases a lot of energy. Crude oil also needs to be refined into the various fuels before it can be used, and no new refineries have been built in the United States in years, despite increasing demand. Not only that, burning fossil fuels produces large amounts of carbon dioxide, which helps the atmosphere trap heat, leading to the "greenhouse effect", also known as "global warming". We, as a people, have started seriously looking into alternative ways to produce energy, especially electricity. Power plants generally burn coal or oil to produce heat, which boils water to steam under pressure, which turns fan blades called "turbines", which are connected to a magnet that turns through a coil of wire (called a "generator"). This creates electricity, which is sent out to households and businesses all over the country. There are many ways to make a generator turn to produce electricity. Giant wind farms employ hundreds of massive masts to which are attached fan blade assemblies, each fan blade being longer than an 18-wheeler tractor trailer! These fan blades turn in the wind, turning the generator. River water blocked by dams is forced through small openings in the dam through turbine blades, which turn generators. This is called hydroelectric power. We have even learned how to convert the motion of ocean waves into usable electrical energy. Solar power takes sunlight and converts it directly into electricity using what is called the "photoelectric effect". All of these alternative forms of energy are expensive and most (like solar plants and wind farms) generate electricity only when conditions are right (the wind is blowing or the sun is out).

Countries with very little oil of their own (like France and Japan) have two choices. They can either import oil (which is not good for the economy) or find another way to generate it. These countries have found an alternate energy source with which to produce electricity: **nuclear power**. This uses a nuclear fission reaction instead of burning oil or coal to produce the heat necessary to turn water to pressurized steam (which turns the turbine which turns the generator). Nuclear power never caught on in this country to the extent that it has in France and Japan. Though 20% of our electricity is generated by nuclear power plants, the general public has generally been unfavorable to nuclear power. They fear an accident like the 1986 Chernobyl reactor meltdown that rendered thousands of square miles of countryside in the Ukraine uninhabitable. The fact is, the Russians underbuilt their power plants to save money. Our power plants are built with regulated safeguards that make an accident (and resulting devastation) like Chernobyl virtually impossible. Another concern is the possibility of a terrorist attack. Nuclear power plant containment structures are built with multiple layers of protection, and can withstand the impact of a large airplane. Also contrary to "popular" belief, a nuclear power plant CANNOT undergo a nuclear explosion like a bomb. It is physically impossible.

Nuclear power plants do produce waste products that are extremely compact and are contained within the reactor. What to do with these wastes has been a matter of much debate. New technologies are emerging which will allow the reuse of waste products, reducing their volume even further.

There is a movement underway to build new, updated nuclear power plants here in the United States. This would bring "green" electricity to more people, allowing cars to become electric and rechargeable (especially commuter cars) and cutting down significantly on the amount of carbon dioxide we are currently putting into the atmosphere. It will also cut down on our dependence on a resource in dwindling supply, and our dependence on other countries to provide us with it. We have a whole fleet of nuclear-powered submarines and aircraft carriers that have operated flawlessly for decades. Are you ready for a little nuclear power in your life? Too late! You've already got it! Time for more? You decide! This will involve a research project at the end so you can decide for yourself if nuclear power is for you!

NUCLEAR FISSION – A few nuclei larger than Fe-56 can be split into smaller nuclei, destroying a tiny bit of mass and creating vast amounts of energy. Nuclear fission produces, gram for gram, thousands of times more energy than burning fossil fuels.

NUCLEAR FISSION REACTORS (Like the one at Indian Point, which generates electricity for Orange & Rockland as well as Central Hudson customers) - operate on the following reaction:

$$^{235}_{92}U + ^{1}_{0}n \rightarrow ^{92}_{36}Kr + ^{141}_{56}Ba + 3\ ^{1}_{0}n + \text{energy}$$

U-235 is the FISSIONABLE FUEL. It is found in the reactor in the form of uranium oxide pellets, sealed into FUEL RODS. When nuclei of U-235 are hit by a SLOW-MOVING NEUTRON, the nucleus absorbs the neutron and splits apart into TWO SMALLER NUCLEI (usually of different sizes). The split also releases 2 or 3 (depending on what the two smaller nuclei were) FAST-MOVING NEUTRONS, which, if you can slow them down, can be used to split even more U-235 nuclei. This process destroys a tiny bit of mass, producing huge amounts of energy.

In order to slow the fast-moving neutrons down so that more U-235 nuclei can absorb them, the fuel rods are placed into a MODERATOR, a material that can slow the neutrons down without stopping them. In the United States, water is used as a moderator. This is convenient, because the water also acts as a coolant in the case of an emergency. The Chernobyl reactor used a moderator made of graphite, which does the job, but is a solid and has no cooling properties. Graphite is found in your pencil, it's crystalline carbon.

As more and more U-235 nuclei are split, even more neutrons are released. This produces a CHAIN REACTION, which can get out of control and cause the U-235 to heat up enough to melt. Molten U-235 can melt its way right through the reactor's containment structure, which is what happened in Chernobyl. In 1979, the Three Mile Island nuclear power plant near Harrisburg, Pennsylvania, had a partial meltdown, but the multiple levels of containment kept the radioactive material from escaping. To control the flow of neutrons, CONTROL RODS can be inserted between the fuel rods. These are made of steel alloys that have very high melting points, and can absorb neutrons without becoming radioactive themselves. To slow the chain reaction down, the rods are pushed further down between the fuel rods, and to speed the reaction up, the rods are raised until the desired temperature is reached. In the event of an emergency, or if the reactor needs to be shut down for maintenance (like refueling the reactor), the control rods drop all the way down, cutting off all of the neutrons flying between the fuel rods and stopping the reaction completely. This mechanism was defective in the Chernobyl plant, leading to a meltdown and a pressure-induced explosion.

How The Uranium Is Obtained

U-235 exists only in tiny concentrations (0.72%) in naturally occurring uranium ore. To make it suitable for fuel rods, the uranium must be ENRICHED to a minimum of 3%. This is done using diffusion or centrifuge techniques. In a centrifuge, the uranium (which boils at 3818°C) is vaporized into a gas. It is put into a centrifuge, which spins the sample and separates the isotopes out by mass. In this manner, uranium can be enriched to 3% for nuclear power plants, or beyond, up to 90% or more for nuclear fission bombs.

Nuclear Fission Bombs

A nuclear fission bomb releases thousands of times more energy than chemical explosives. The design is nearly identical to a fission reactor, except that a bomb has 90% or more enriched U-235, and no control rods. A typical fission bomb can produce an explosion with destructive energy equivalent to many thousands of TONS (kilotons) of TNT, one of the most powerful chemical explosives. The bomb "Little Boy", dropped on Hiroshima, Japan on August 6th, 1945, exploded with approximately 15 kilotons of force. This explosion produced a fireball 1200 feet across, which vaporized everything in its path. The heat caused a firestorm with a two-mile diameter that destroyed everything in that area. This bomb killed about 140,000 people. And yet, nuclear fission bombs are far from the most powerful weapon humans have created. More later…

NUCLEAR FUSION - two small nuclei combine together to form a single larger nucleus with slightly less mass than the nuclei that combined. The difference in mass, the MASS DEFECT, is converted into massive amounts of energy. The energy output of fission reactions is thousands of times greater than chemical reactions, but the energy output of fusion reactions is a thousand times greater still. Nuclear fission explosions measure in thousands of tons (kilotons) of TNT, which nuclear fusion explosions measure in millions of tons (megatons) of TNT.

Because of technical issues, we have not been able to create a sustained fusion reaction. Our current technology uses more energy to make the fusion happen than we get out of it. Until that hurdle is overcome, fusion will be of limited use to us. Once we have broken the technological barrier, we will have at our disposal limitless energy, and the only fuel is the most common element in the universe: hydrogen.

93 million miles away floats a ball of plasma 870,000 miles in diameter. This is the equivalent of 109 Earth diameters. This giant ball has enough volume to swallow a million Earths. It is, of course, the Sun. The core of the sun is under intense pressure due to gravity, which generates temperatures of millions of degrees. At these temperatures, atoms lose their electrons and form a phase of matter known as PLASMA. Plasma is made of nothing but the positively-charged nuclei of atoms.

Under these intense temperatures and pressures, the positive nuclei, which usually repel each other (due to their like charges), are forced together. Hydrogen nuclei fuse to form helium nuclei:

$$^{2}_{1}H + ^{2}_{1}H \rightarrow ^{4}_{2}He + \text{energy}$$

$$^{2}_{1}H + ^{2}_{1}H \rightarrow ^{4}_{2}He + ^{1}_{0}n + \text{energy}$$

Whereas fission reactions can happen at any temperature, fusion can only occur at temperatures of millions of degrees. There are a few scientists who have claimed to have discovered "cold fusion" (at room temperature), but none of their experiments have been able to be duplicated. If "cold fusion" is ever made real, our energy problems will be at an end. Scientists have said that "fusion power is 20 years away" for the last 50 years. Could your generation be the first to realize this dream?

Nuclear Fusion Bombs

In order to reach the extremely high temperatures required for fusion, nuclear fusion bombs contain in them a nuclear fission bomb. The fission bomb generates the heat needed to get the fusion going. These bombs are thousands of times more powerful than plain old fission bombs. Fusion bombs are also known as "H-Bombs" or "Thermonuclear Weapons". The United States has a total of over 4000 active nuclear weapons, combining both fission and fusion devices. Russia has nearly 6000. No other nation has more than 200 active nuclear weapons at the current time. The United Kingdom, France, China, India, Pakistan, North Korea and Israel all have an active nuclear weapons program, and Iran and Syria are suspected to have ones themselves.

The most powerful thermonuclear bomb that has ever been exploded was the 50 megtaton "Tsar Bomba", which was detonated in a test on October 31st, 1961. There is a testing ban on nuclear weapons in force around the globe, which North Korea broke in 2006. Since then, there have been no (known) nuclear explosions on earth. An idea was floated to seal the 2010 Deep Horizon oil rig leak with a nuclear bomb a mile below the ocean's surface, but that idea was never considered to be viable due to nuclear test ban treaties.

So, what's the difference between NUCLEAR FISSION and NUCLEAR FUSION?

Unique To Nuclear Fission $^{235}_{92}U + ^{1}_{0}n \rightarrow ^{92}_{36}Kr + ^{141}_{56}Ba + 3\ ^{1}_{0}n + \text{energy}$	**COMMON TO BOTH**	**Unique to Nuclear Fusion** $^{2}_{1}H + ^{2}_{1}H \rightarrow ^{4}_{2}He + \text{energy}$
Reaction splits a large nucleus apart to form two smaller ones.	Both generate their energy the same way…by converting small amounts of mass (MASS DEFECT) into extraordinary amounts of energy.	Reaction combines two small nuclei together to form one larger one.
Reaction is unknown in the natural world, is a form of artificial transmutation		All stars are powered by nuclear fusion
Reaction can take place at any temperature or pressure		Reaction requires temperatures of millions of degrees and vast pressures
Reaction is currently being used to produce electricity for our use		Reaction has not been made energy-efficient enough for use
Requires mining to extract uranium ore		Hydrogen is the most abundant element in the universe
Produces THOUSANDS of times more energy than conventional chemical explosives		Produces MILLIONS of times more energy than conventional chemical explosives
Produces radioactive wastes		Produces essentially no radioactive waste

Student Name:_____ Grades: _____, _____, _____, _____
Nucleus Decay HalfLife Power

1) Atomic Structure (The Nucleus) Homework

A) Multiple-Choice Questions: place your answers in the space to the left of each question.

_____1) One atomic mass unit is defined as weighing
a) 1/16 the mass of O-16 b) 1/12 the mass of C-12
c) 1/32 the mass of S-32 d) 1/10 the mass of B-10

_____2) How many electrons does it take to weigh the same as a proton?
a) 1 b) 100 c) 957 d) 1836

_____3) Carbon-12 contains 6 protons, 6 neutrons and 6 electrons. Which subatomic particle, if changed, would change the identity of the element?
a) proton b) neutron c) electron d) all of the above

_____4) Which of the following represents isotopes of the same element?
a) ${}_{8}{}^{18}O$ and ${}_{8}{}^{18}O$ b) ${}_{8}{}^{16}O$ and ${}_{8}{}^{18}O$
c) ${}_{8}{}^{18}O$ and ${}_{9}{}^{18}F$ d) ${}_{9}{}^{19}F$ and ${}_{10}{}^{19}Ne$

Explain why the two symbols represent isotopes of the same element:

Explain why ONE of the other choices are NOT isotopes of the same element.

_____5) A nucleus of Mg-25 contains how many neutrons?
a) 12 b) 13 c) 25 d) 37

Explain how you reached this determination.

_____6) What is the nuclear charge of a nucleus of P-32?
a) +15 b) +17 c) +32 d) +47

Explain how you reached your conclusion.

_____7) How many electrons orbit a nucleus of N-13?
a) 6 b) 7 c) 13 d) 19

Explain why this is.

B) Complete the following table:

Isotope	# Protons	# Neutrons	# Electrons	Nuclear Charge
$^{39}_{19}K$				
$^{42}_{20}Ca$				
$^{56}_{26}Fe$				
$^{232}_{92}U$				

C) Find the most common isotope for each of the following elements:

Element	Atomic Mass (from Periodic Table)	Most Common Isotope
Ca	**40.08**	**Ca-40**
Br		
Zn		
Hg		

D) Weight-Average Mass Problems (show all work, round your answer to the thousandths place):

1) What is the average atomic mass for thallium, Tl, if there are two isotopes with the following masses and abundances?

Tl-203 has a mass of 203 amu with an abundance of 29.5 %

Tl-205 has a mass of 205 amu with an abundance of 70.5 %

2) A meteor crashes to Earth, is collected and analyzed. To everyone's surprise, a new element is discovered with an atomic number of 120. Calculate the weight-average atomic mass for this new element, Ubn (Unbinnulium). Show all work below.

Isotope of $_{120}$Ubn	Relative Abundance
Ubn-312	37.26 %
Ubn-313	2.79%
Ubn-315	59.95%

2) Natural Radioactivity Homework

A) From the History Of Radioactivity Reading (complete sentences on looseleaf). Answers must be specific and detailed and show thought.

1) Radiation kills living cells. Why is it used to treat tumors? What are the benefits and risks of this treatment?

2) How did Becquerel discover that the uranium gave off the energy to expose the protected photographic film on its own, rather than by absorbing then re-transmitting the sun's energy?

3) How did Becquerel demonstrate that the radioactive particles were charged, unlike Roentgen's X-rays?

4) What two new radioactive elements did Marie Curie discover? What were the non-radioactive elements that she separated them from?

5) Some remote controls have buttons which glow in the dark. Is this an example of fluorescence or phosphorescence? Explain.

6) What happens to the glow of phosphorescent materials if they are left in the dark overnight?

7) Why do phosphorescent materials combined with radium continue to glow strongly, even after years of total darkness?

8) Radioactive materials like radium and uranium give off heat energy when they decay. How long does it take a 5.0 gram sample of radium to melt 5.0 grams of ice? Explain.

9) Uranium is fairly common in the Earth's core, but not in the core of the moon. The Earth has a molten core and mantle, topped with a solid crust. The moon many have a liquid core, but its mantle and crust are solid. What role might uranium play in the fact that the Earth has tectonic motion but the moon doesn't?

10) How does a Geiger counter make use of the ionizing ability of alpha and beta decay to detect radiation?

B) Multiple-Choice Questions: write the answer in the space to the left of each question.

_____1) Which particle is given off by a decaying nucleus of K-37?
a) alpha b) beta c) positron d) gamma

_____2) Which particle has the greatest mass?
a) alpha b) beta c) positron d) gamma

_____3) Which particle can only be stopped by a 1-foot thickness of lead?
a) alpha b) beta c) positron d) gamma

_____4) Which element has no stable isotopes, only having radioactive ones?
a) Si b) Am c) Cu d) C

_____5) Which decay particle will deflect towards a positively charged plate?
a) alpha b) beta c) positron d) gamma

Explain:

_____6) Which particle will, when given off, cause the atomic number of the decaying nucleus to INCREASE by one?
a) alpha b) beta c) positron d) gamma

Explain:

C) Short-Answer: answer in the spaces provided under each question.

1) You think you have discovered a chunk of radioactive rock. List one way you could check to see if the rock is radioactive:

2) Radiation kills living cells. Why is it used to treat tumors?

4) Do today's glow-in-the dark things (like stars you might put on your ceiling) rely on radioactive isotopes to produce their glow? How can you tell?

D) Given the unstable isotope symbol, mass, and decay type, determine the daughter nuclide (decay product) by writing the complete nuclear equation (use atomic numbers and symbols from the periodic table).

Example: beta decay of Ag-104 $^{104}_{47}Ag$ ----> $^{0}_{-1}e$ + $^{104}_{48}Cd$
1) beta decay of Kr-87
2) alpha decay of Po-212
3) beta decay of C-14
4) positron decay of He-6
5) positron decay of Ne-19
6) alpha decay of U-240
7) beta decay of F-20
8) beta decay of Tl-208 (thallium, not titanium…the second letter is lower-case)

E) Look up how each of the following isotopes undergoes decay on Reference Table N and then write the *complete* decay equation for each isotope.

Example: ^{233}U: $_{92}^{233}U \rightarrow {}_{2}^{4}He + {}_{90}^{229}Th$
^{137}Cs:
^{220}Fr:
^{239}Pu:
^{37}K:
^{99}Tc:

3) HALF-LIFE HOMEWORK

A) Multiple-Choice Questions: write the answer in the space to the left of each question.

_____1) Which isotope is used for detecting brain tumors?
a) Tc-99 b) I-131 c) U-238 d) Co-60

_____2) Which isotope is used to determine the age of rocks?
a) Tc-99 b) I-131 c) U-238 d) Co-60

_____3) Which isotope is used to treat hyperthyroidism?
a) Tc-99 b) I-131 c) U-238 d) Co-60

B) Problems: Show all of your work in the space provided under each question, and draw a box around your final answer, which must have a unit as part of the answer.

1) What is the half-life of a radioactive isotope if 25% of the original mass of the isotope remains after 20. days?

2) A Geiger counter is used to monitor the radioactivity level of a certain isotope. During a 30 .hour period, the count rate dropped from 600. counts/minute to 150. counts/minute. What is its half-life?

3) The half-life of cesium-137 is 30. years. How much ^{137}Cs was present originally if, after 120. years, 6.0 g remained?

4) The half-life of barium-131 is 12.0 days. How many grams of ^{131}Ba remain after 60. days, if the initial sample weighed 10.0 g?

5) How much ^{32}P was present originally if, after 71.5 days, 2.0 grams remain (half-life of ^{32}P is 14.3 days)

6) A Geiger counter detects 300. counts per minute when a sample of neon-19 is placed under it. Based on Reference Table N, how long will it take for the Geiger counter to drop to 75 counts per minute?

7) A nuclear bomb test 56.2 years ago generated Sr-90, which dispersed into the surrounding environment. A soil test today shows 20 micrograms of Sr-90 in a 1-kg sample of soil. How many micrograms of Sr-90 per kg of soil must have been present right after the test blast? Use Reference Table N.

8) An ancient scroll made of papyrus is analyzed, and it is found to contain only 25% of the steady-state concentration of C-14 found in living organisms. How old is the material that the scroll is made of?

9) Why would the ^{238}U to ^{206}Pb method be inappropriate for determining the age of a biological sample thought to be about 5000 years old? Explain, using the half-life duration of ^{238}U to support your explanation.

10) A very nasty person gives you a 10.0-g gold coin for your birthday. Why nasty? Because it is made entirely out of Au-198. Why is that bad? Look at Reference Table N.

a) What will this isotope of gold decay into? Show the entire decay equation.

b) How much time will it take for the gold coin to contain only 0.625 grams of gold-198?

c) How many grams of your decay product will there be after this amount of time?

d) If the coin were placed in an electric field, between a + charged plate and a – charged plate, towards which plate will the decay particle be deflected? Explain.

4) NUCLEAR POWER HOMEWORK

A) What particle on Reference Table O besides a gamma ray cannot be accelerated by a particle accelerator? Explain.

B) Complete the following equations by writing the correct atomic number, atomic mass and the symbol for the missing particle X.

Reaction	Particle X	Is this an example of natural decay or artificial transmutation?
1) $^{40}_{20}Ca + X \text{ -----> } ^{40}_{19}K + ^{1}_{1}H$		
2) $^{96}_{42}Mo + ^{2}_{1}H \text{ -----> } ^{1}_{0}n + X$		
3) $^{64}_{26}Fe + ^{4}_{2}He \text{ -----> } 2\ ^{1}_{1}H + X$		
4) $^{246}_{96}Cm + ^{12}_{6}C \text{ -----> } 4\ ^{1}_{0}n + X$		
5) $^{82}_{35}Br \text{ -----> } ^{82}_{36}Kr + X$		
6) $^{19}_{10}Ne \text{ -----> } ^{0}_{+1}e + X$		
7) $^{37}_{18}Ar + ^{0}_{-1}e \text{ -----> } X$		
8) $^{98}_{42}Mo + ^{1}_{0}n \text{ -----> } ^{99}_{43}Tc + X$		
9) $^{40}_{18}Ar + X \text{ -----> } ^{43}_{19}K + ^{1}_{1}H$		
10) $X \text{ -----> } ^{23}_{11}Na + ^{0}_{+1}e$		

C) Multiple-Choice Questions: write the answer in the space to the left of each question.

_____1. Which of the following isotopes can act as fissionable fuel in a fission reaction?
a) C-14 b) U-235 c) U-238 d) Am-241

_____2. Which of the following nuclear reactions represents artificial transmutation?
a) ${}^{96}_{42}Mo + {}^{2}_{1}H \text{ -----> } {}^{1}_{0}n + {}^{97}_{43}Tc$ b) ${}^{104}_{47}Ag \text{ ----> } {}^{0}_{-1}e + {}^{104}_{48}Cd$
c) ${}^{235}_{92}U + {}^{1}_{0}n \rightarrow {}^{92}_{36}Kr + {}^{141}_{56}Ba + 3\ {}^{1}_{0}n$ d) ${}^{2}_{1}H + {}^{2}_{1}H \rightarrow {}^{4}_{2}He$

_____3. Which of the following nuclear reactions represents natural decay?
a) ${}^{96}_{42}Mo + {}^{2}_{1}H \text{ -----> } {}^{1}_{0}n + {}^{97}_{43}Tc$ b) ${}^{104}_{47}Ag \text{ ----> } {}^{0}_{-1}e + {}^{104}_{48}Cd$
c) ${}^{235}_{92}U + {}^{1}_{0}n \rightarrow {}^{92}_{36}Kr + {}^{141}_{56}Ba + 3\ {}^{1}_{0}n$ d) ${}^{2}_{1}H + {}^{2}_{1}H \rightarrow {}^{4}_{2}He$

_____4. Which of the following nuclear reactions represents nuclear fusion?
a) ${}^{96}_{42}Mo + {}^{2}_{1}H \text{ -----> } {}^{1}_{0}n + {}^{97}_{43}Tc$ b) ${}^{104}_{47}Ag \text{ ----> } {}^{0}_{-1}e + {}^{104}_{48}Cd$
c) ${}^{235}_{92}U + {}^{1}_{0}n \rightarrow {}^{92}_{36}Kr + {}^{141}_{56}Ba + 3\ {}^{1}_{0}n$ d) ${}^{2}_{1}H + {}^{2}_{1}H \rightarrow {}^{4}_{2}He$

_____5. Which of the following nuclear reactions represents nuclear fission?
a) ${}^{96}_{42}Mo + {}^{2}_{1}H \text{ -----> } {}^{1}_{0}n + {}^{97}_{43}Tc$ b) ${}^{104}_{47}Ag \text{ ----> } {}^{0}_{-1}e + {}^{104}_{48}Cd$
c) ${}^{235}_{92}U + {}^{1}_{0}n \rightarrow {}^{92}_{36}Kr + {}^{141}_{56}Ba + 3\ {}^{1}_{0}n$ d) ${}^{2}_{1}H + {}^{2}_{1}H \rightarrow {}^{4}_{2}He$

D. Identify the properties below as belonging to natural decay, artificial transmutation, nuclear fission or nuclear fusion:

Property	Decay, Transmutation, Fission or Fusion?
Requires temperatures of millions of degrees	
Takes two small nuclei and combine them into a larger nucleus	
Takes a stable nucleus and turns it into an unstable one	
Releases millions of times more energy than chemical reactions	
Takes a large nucleus and splits it into smaller nuclei	
Happens all by itself because the nucleus is unstable	
Can be detected with photographic film	
Releases thousands of times more energy than chemical reactions	
Requires a particle accelerator to carry out	
Used to power nuclear submarines and aircraft carriers	
Powers the sun and other stars	

Nuclear Fission Power (Pressurized Water Reactor) Research Project

Nuclear reactors harness the power of nuclear fission reactions to produce massive amounts of energy in the form of heat. The reactors are based around splitting Uranium-235 atoms by showering them with neutrons. There are many different isotopes and elements which are produced by this process, as well as producing more neutrons. All of the "daughter nuclei" are radioactive and unstable. The neutrons produced by the nuclear reactions go on to shower more U-235 atoms, producing a chain reaction which releases large amounts of heat energy. Per mole, the fission of Uranium-235 produces 26 million times more energy than the combustion of methane.

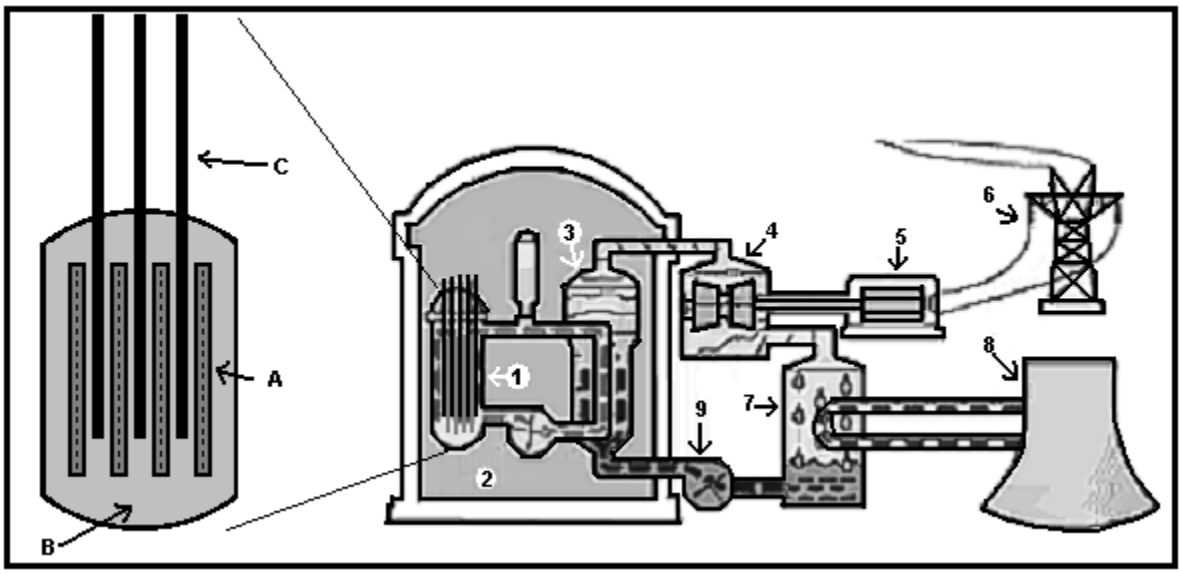

The process by which a nuclear reactor converts the heat released by a nuclear fission reaction into electricity.

Uranium-235 is formed into plates and assembled into groups to form fuel cells which are located in the reactor core (1).

CLOSEUP OF THE REACTOR CORE (LEFT): **Fuel rods** containing 3% U-235 (the minimum needed to sustain a chain reaction) are spaced at regular intervals **(A)**. The fuel rods sit in a **moderator (B)**, which is a material that slows down fast-moving neutrons and allows the U-235 in the fuel rods to absorb them and undergo fission. The moderator is usually water where the hydrogen is deuterium (^{2}H). The spaces between the fuel rods provide room for the movable **control rods (C)**, which are made to absorb neutrons without becoming radioactive. The rods are made of a boron steel or cadmium steel alloy, since steel's main element is Fe-56, which is the most stable isotope on the Periodic Table. The control rods stop neutrons dead in their tracks, giving you the ability to control the rate of fission. Raise the control rods, and more neutrons can fly around, making the reaction faster and hotter. Lower the control rods and you let fewer neutrons fly around, making the reaction slower and cooler. If you want to stop the fission reaction, drop the control rods all the way down. This is done in case of an emergency, or in case the reactor needs to be serviced.

The reactor core sits in a water pool (2) in case of overheating. Water tubes surround the fuel rods, where it absorbs the heat from the fission reaction. The heated coolant is pumped through coils contained in the Steam Generator (3), where the heat is then transferred to a separate (secondary) water system. The absorption of heat by the secondary water serves two purposes; it turns the secondary water into useful steam and it provides cooling water to prevent overheating of the fuel. The newly produced steam runs through turbines (4). These turbines turn the generator magnet inside a coil of wire (5) at the rate of 60 turns per second (60 Hz). After most of the thermal energy of the steam is converted to mechanical energy, the steam is then exhausted into a condenser (7), where it loses its residual heat and is reconverted to water. The water is then returned to the Steam Generator using the pump (9) where the cycle begins again. The heat absorbed from the condensing steam is pumped to a cooling tower (8), where the excess heat is lost to the air, and the cooled water cycled back into the condenser.

Questions on the other side

Answer the following questions on a separate sheet of paper, complete sentences.

1) The nuclear reactor core provides heat that turns water into steam to turn a turbine, which turns a generator. This heat could also be provided by burning fossil fuels such as coal, oil or natural gas. **List two benefits that nuclear fuel has over fossil fuels. List two benefits that fossil fuels have over nuclear fuel. Write a sentence for each benefit defending your choices.**

2) The town you live in has been selected to have a power plant built on its outskirts. It has been left up to the residents of the town as to whether it will be a nuclear power plant or fossil-fuel burning power plant. **Based on the benefits and risks you outlined in 1), above (and any other information you wish to provide) write a paragraph Letter to the Editor as to which kind of power plant should be built…fossil fuel or nuclear. It must be based on fact, not emotional response.** You may want to read further about benefits and risks using the Web as your guide.

You must use at least **two** sources to answer these questions. Include a works cited for the web pages you used along with your answers to these two questions. This will be given a score of 20 points, to be given on the following basis:

Points	What to do to Earn
5	Turn in a paper answering the questions with no references or facts to back it up
10	Turn in a paper answering the questions using one fact from your references
15	Turn in a paper paraphrasing the references you looked up using two facts from your references
20	Turn in a paper that paraphrases your references and uses them to make intuitive judgment calls. Three facts or more must be given for your argument (for #2)

Both questions must be answered to receive credit for this assignment. In addition, the works cited of web sites must be complete to get credit.

<u>Wikipedia can only be used as ONE reference in this report, and only if the page you cite does not have any errors or warnings on the top of the page.</u>

Proper setup of Web citation: "Title of Web Page" (http://the exact web address of the page you are citing)

Example of a proper web site citation (fictitious example, don't bother looking for it):

"Nuclear Reactors: Yes or No?" (http://www.sciteck.edu/nuclear/fissionyesno.html)